Dylan Thornburg & Joseph Kahmisy

SANTA CLARA UNIVERSITY	ELEN 115 Spring 2024	Dr. S. Krishnan

Lab 7: MOSFET characteristics and MOS as a switch

I. OBJECTIVES

- To trace the **i-v** curves for a MOSFET.
- To study the MOSFET as a switch

II. LAB

Part 1: MOS i-v characteristics

(a) Draw the MOS circuit given in Figure 1 in LTSpice (Make sure you connect the Body Terminal to Ground). You will use the NMOS4 component from the library.

Figure 1

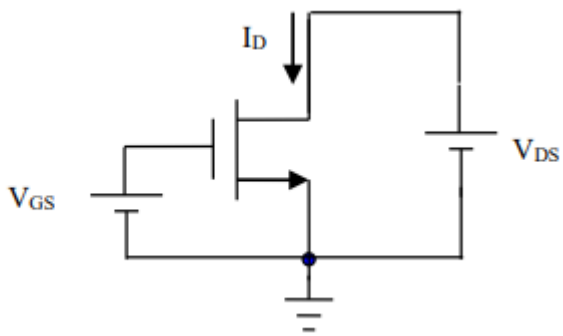

(b) Edit the MOSFET model to provide the model parameters as used in the prelab.
VB toB= 0.6V, k' = 30μA/V2, λ = 0, W = 100μm, L = 1μm
You can do this by including a command:
.MODEL MYNMOS NMOS VTO=0.6 KP=30u LAMBDA=0 GAMMA=0

(c) Connect a **DC** voltage source from drain to ground and call it VDS. Connect a **DC** voltage source from gate to ground and call it VGS.

(d) Set up a DC simulation that is a nested sweep. The statement is shown below.
.dc VDS 0 2.5 0.1 VGS 0 2.5 0.5

(e) Run the simulation and plot the drain current I_D vs. VDS for various VGS.

(f) Note the three regions of operation of the MOSFET – cutoff, linear and saturation.

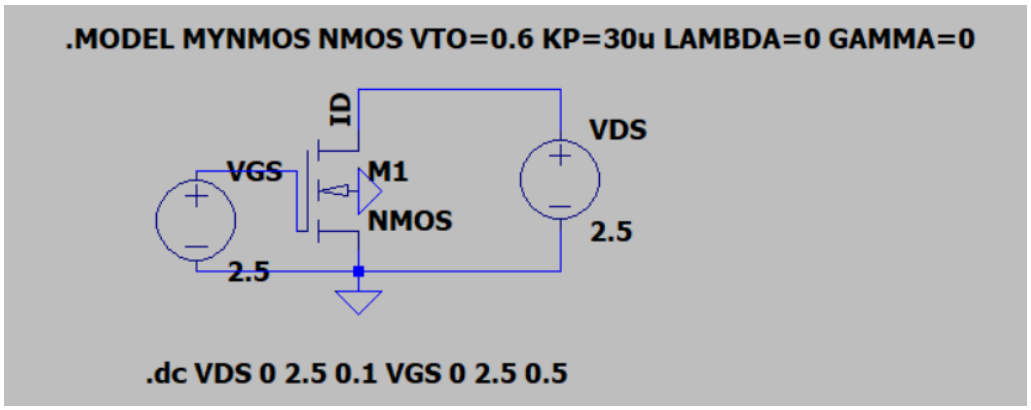

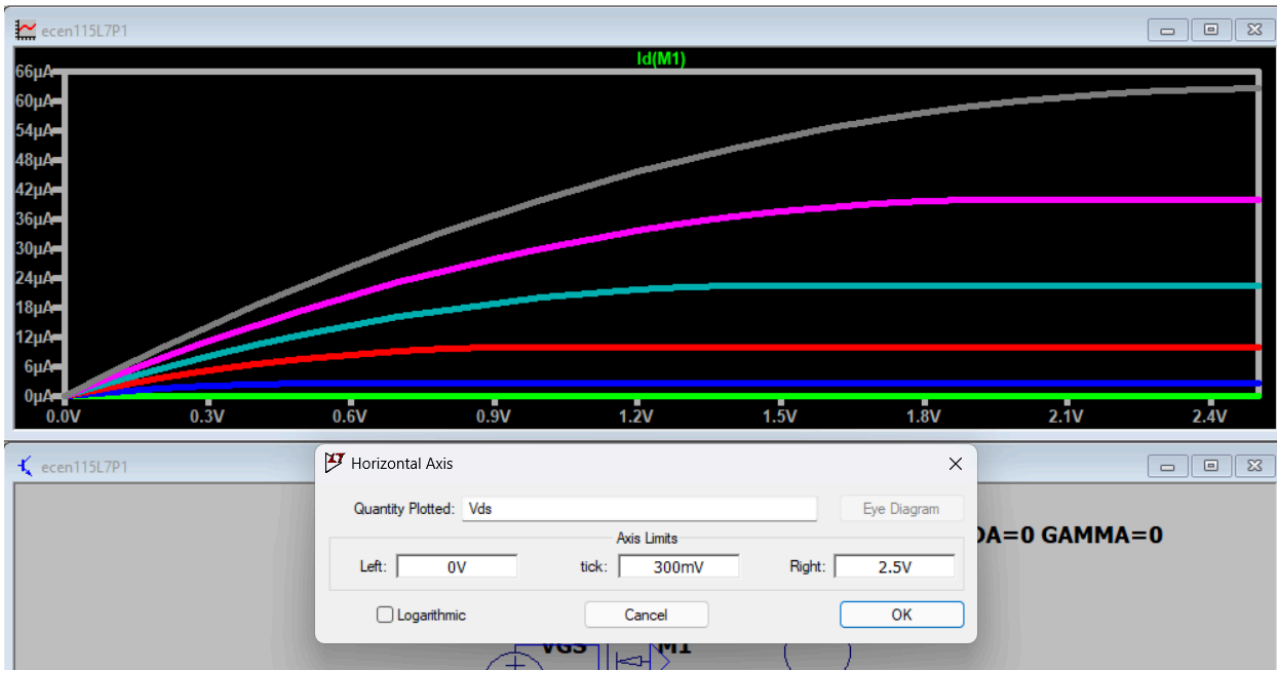

The cutoff region is the light green line that stays on the x axis (VGS=0). All other VGS values are not in cutoff and depending on VDS are either in saturation or active. When the slope of all other VGS values is near 0, the mosfet is in saturation. When the slopes are linear, the mosfet is active.

Part 2: MOS as a Switch

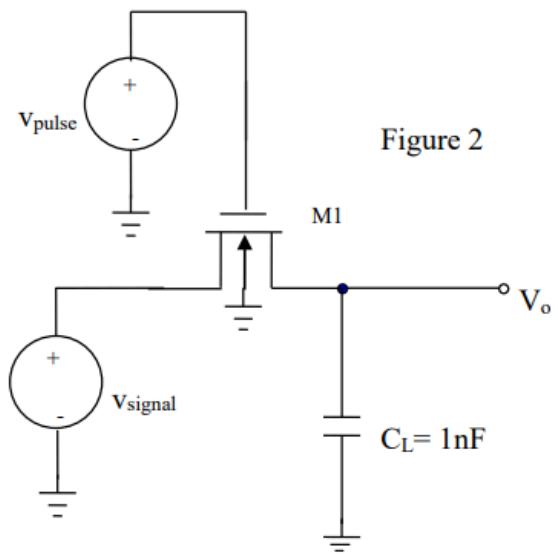

Figure 2

Sample and Hold Circuit

(a) Draw the MOS circuit given in Figure 2. Connect the bulk terminal to ground.
(b) Edit the MOSFET model for model parameters as in the prelab. The component model and size is preserved when copied from previous schematic.
(c) The sinusoidal input to V_{signal} has a DC Offset of 0.5V and peak voltage 0.5V at a frequency of 1KHz.
(d) Connect a pulse to the gate which switches from 0V to 2.5V with a time period of 0.1msec and pulse width of 0.05msec.
(e) The capacitor is 1nF.
(f) Run a transient simulation and plot input and output on one screen shot. (g) Observe the output and the sample points and the hold operation on the capacitor. What do you observe?

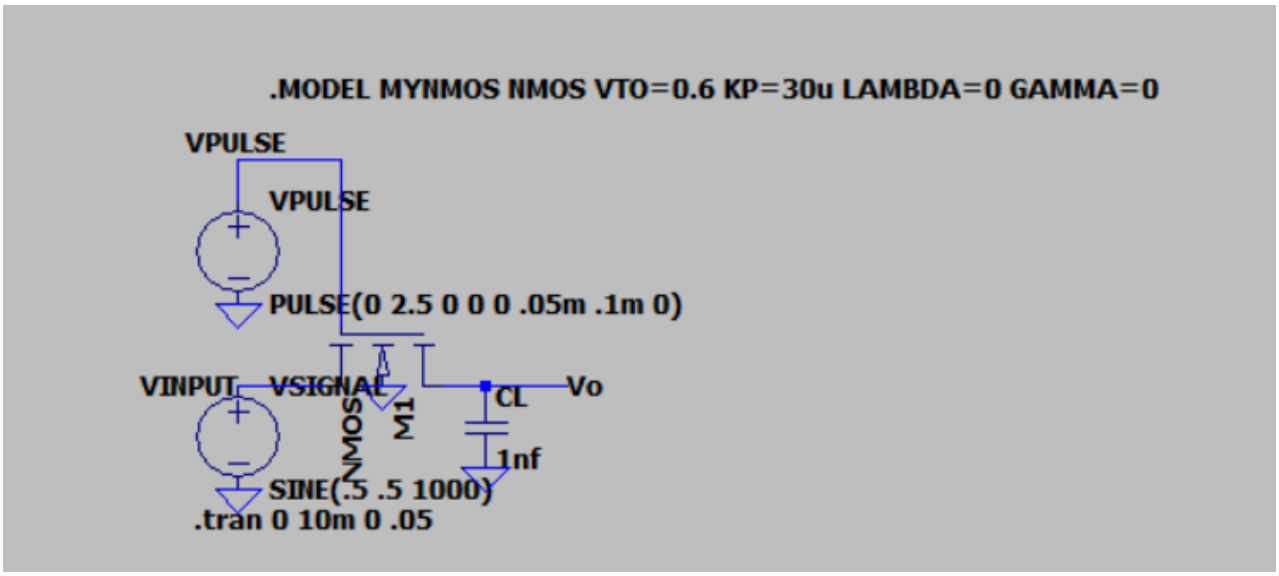

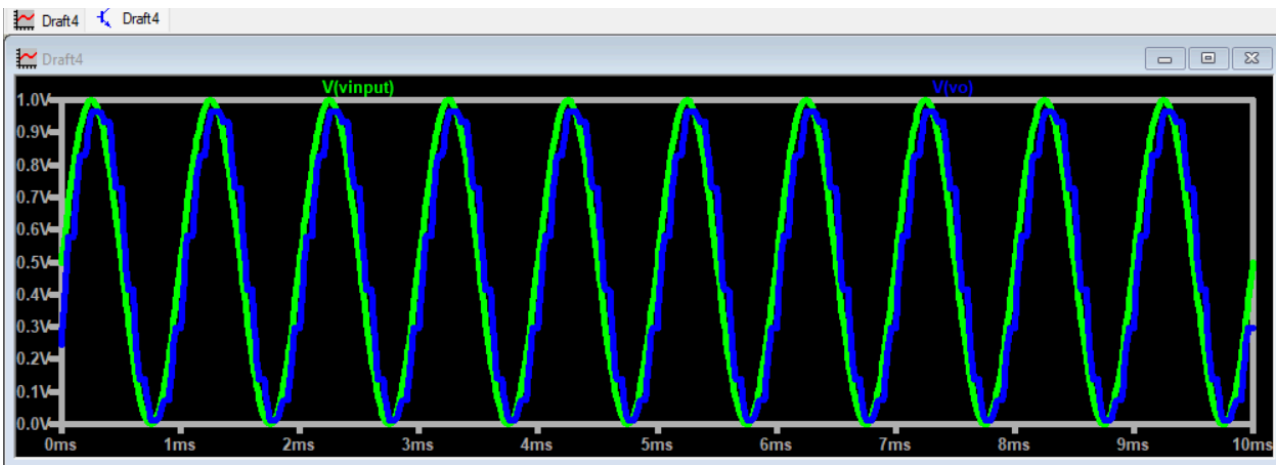

We see the capacitor holding the charge and still outputting a voltage even when the mosfet is in cutoff mode.

(h) What would happen if we drop the capacitor value in half?

The graph smooths out a bit as the cap can't hold as much voltage.

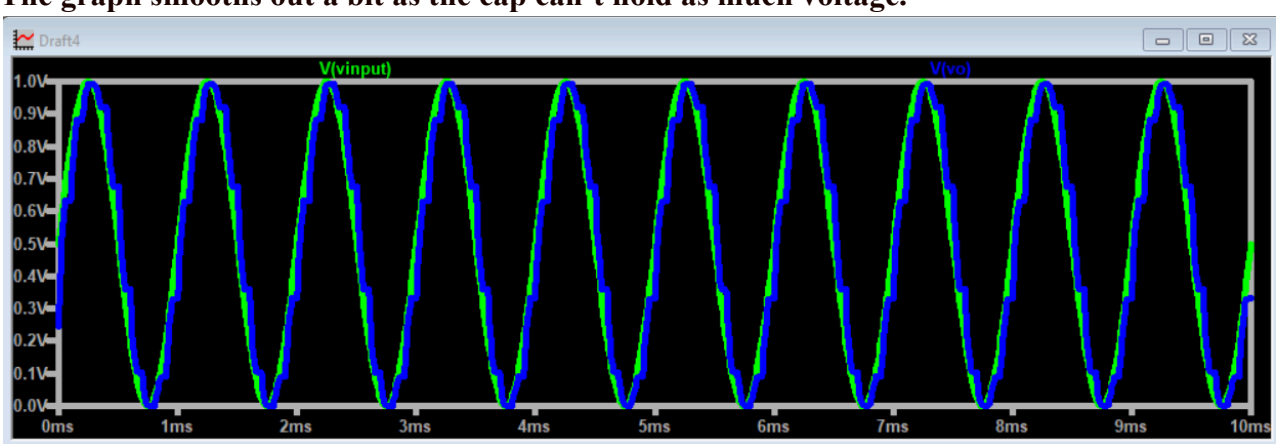

(i) What would you observe if the size of the MOSFET is doubled?

It will hold more of a charge because a mosfet is made using a capacitor.

(j) Change Vsignal to have a DC Offset of 1.5V and peak voltage 1V at a freq of 1Khz.

(k) Run a transient simulation and plot input and output on one screen shot. (l) Observe the output voltage and the sample points and the hold operation on the capacitor. What do you observe?

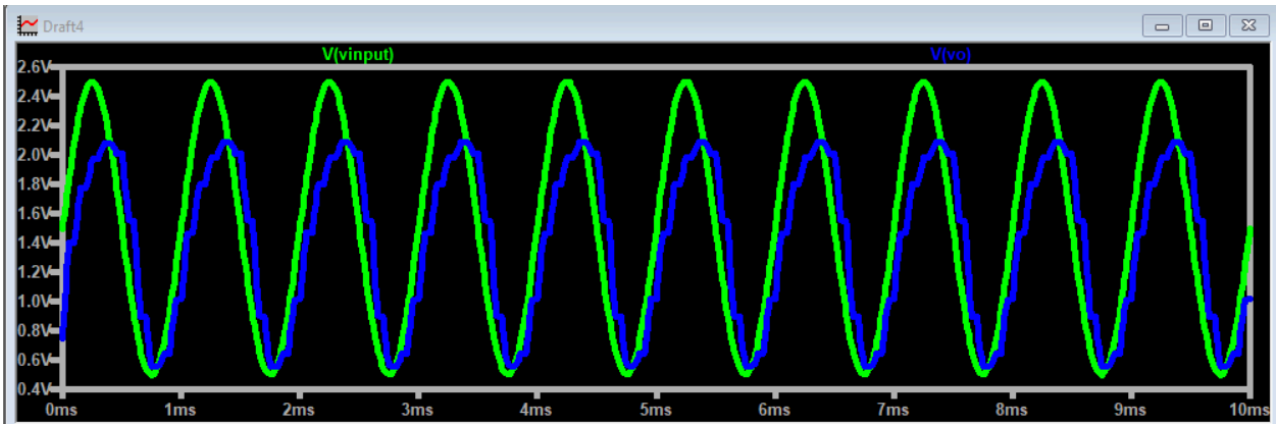

The V output now doesn't get to the max positive amplitude.

Transmission gate

Now connect a PMOS in parallel with the NMOS. Its gate is clocked by a complement of the NMOS gate signal. Use VB toB= - 0.6V, k' = 15µA/V2, λ = 0, W = 100µm, L = 1µm Repeat the previous section.

(a) Draw the MOS circuit given in Figure 2. Connect the bulk terminal to ground. (b) Edit the MOSFET model for model parameters as in the prelab. The component model and size is preserved when copied from previous schematic.

(c) The sinusoidal input to v_{signal} has a DC Offset of 0.5V and peak voltage 0.5V at a frequency of 1KHz.

(d) Connect a pulse to the gate which switches from 0V to 2.5V with a time period of 0.1msec and pulse width of 0.05msec.

(e) The capacitor is 1nF.

(f) Run a transient simulation and plot input and output on one screen shot. (g) Observe the output and the sample points and the hold operation on the capacitor. What do you observe?

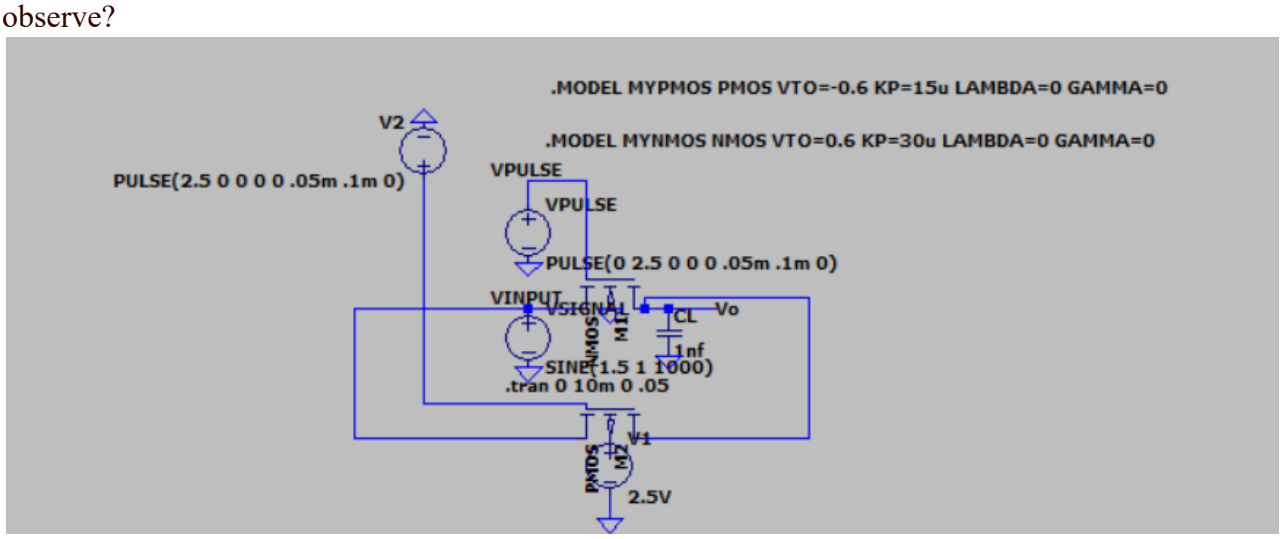

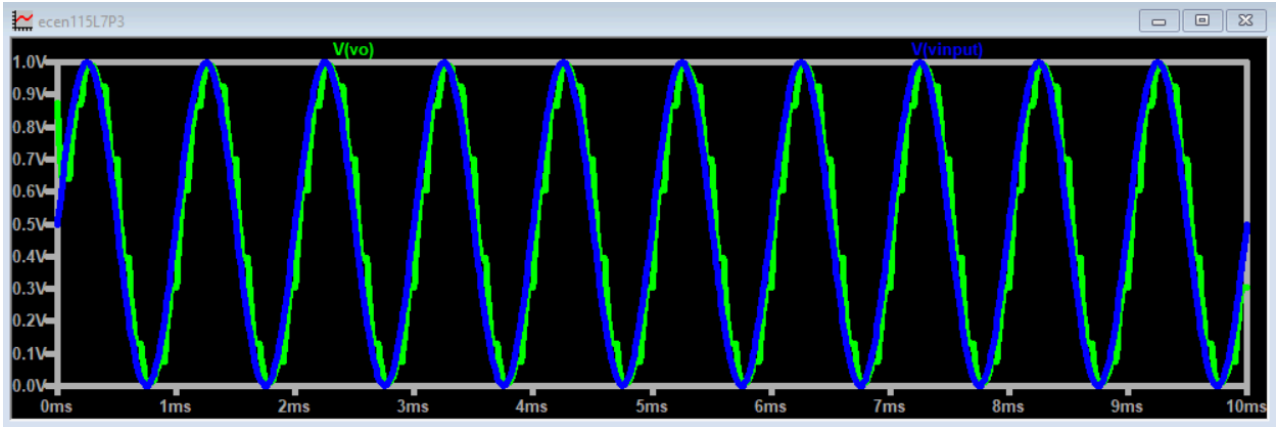

(h) What would happen if we drop the capacitor value in half?
Same thing. The graph smooths out as we have less charge held.
(i) What would you observe if the size of the MOSFET is doubled?
Same thing. The graph would be blockier and more charge would be held.
(j) Change Vsignal to have a DC Offset of 1.5V and peak voltage 1V at a freq of 1Khz.

(k) Run a transient simulation and plot input and output on one screen shot. (l) Observe the output voltage and the sample points and the hold operation on the capacitor. What do you observe?

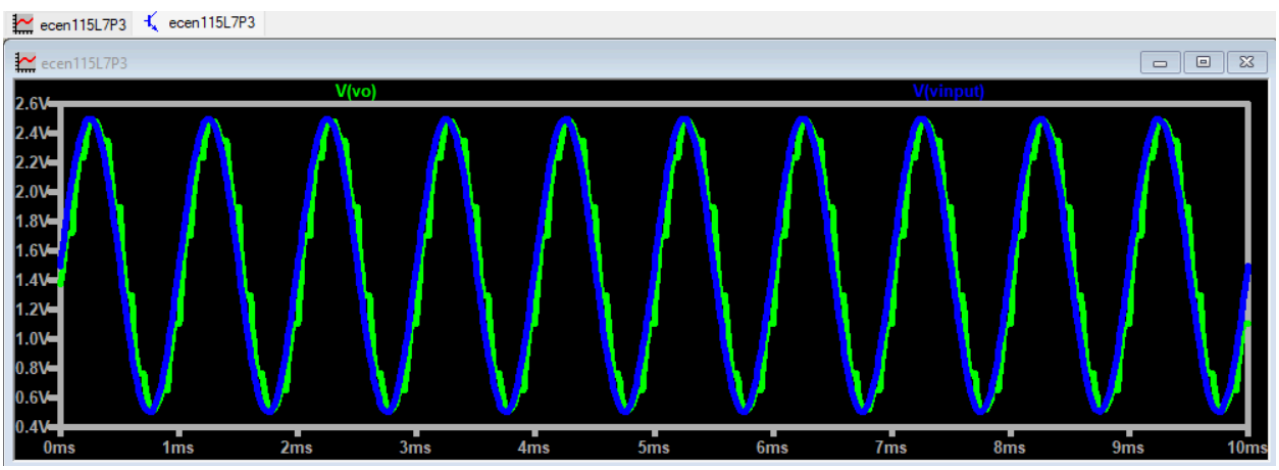

We observe that the output is now able to get to the full top of the amplitude.

<u>Part 3: iv curve of a MOSFET</u>

(i) Use the curve tracer in the lab to plot iv curves of the various MOSFETs given to you.

(ii) Note down the i-v curves of the various MOSFETs you measure.

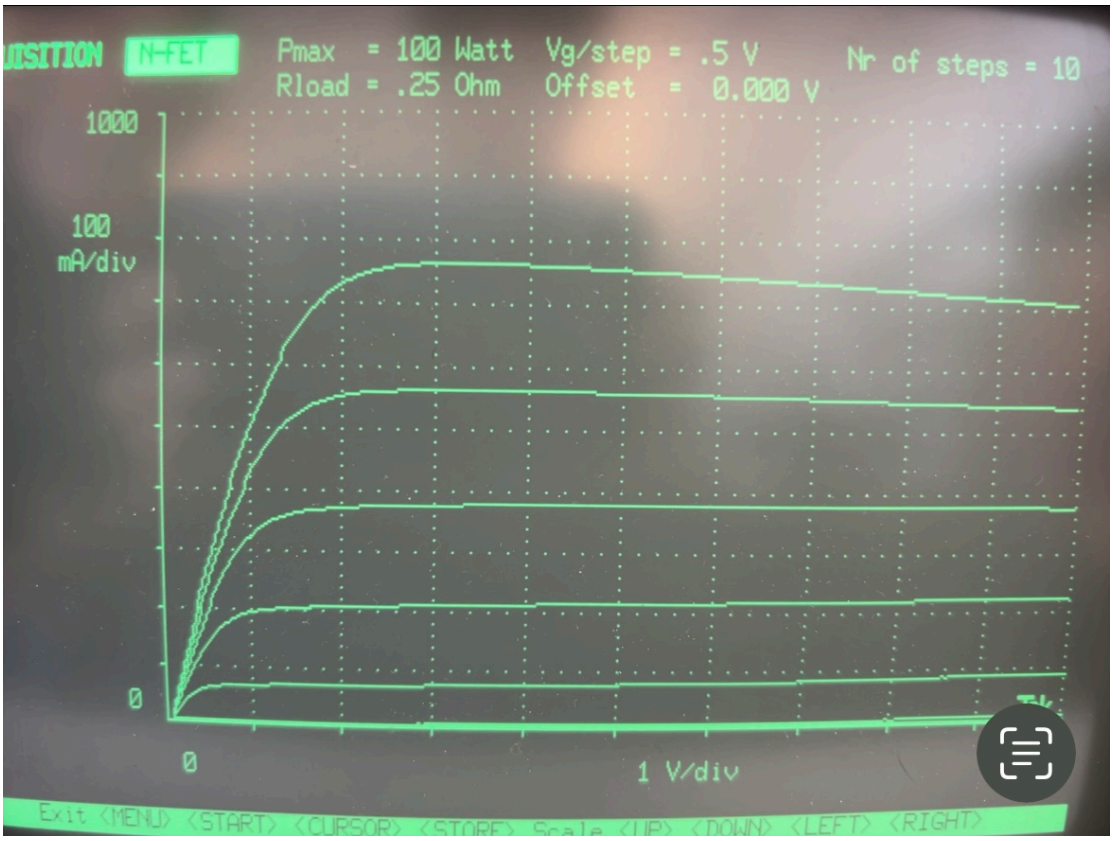

Cutoff is the zero slope and zero y value line. Saturation is where the slopes of the other lines go to zero. Active is when the lines are linear.

TA Check Point: Complete Part 2 and show your TA that you are proficient in using the curvetracer.

Part 4: Physical build of CMOS Logic gates

You will be using the chip CD4007C whose pinout is shown below. The data sheet gives you all the electrical details of the chip. Remember to connect power and ground to the chip.

Connection Diagram

Pin Assignments for DIP and SOIC

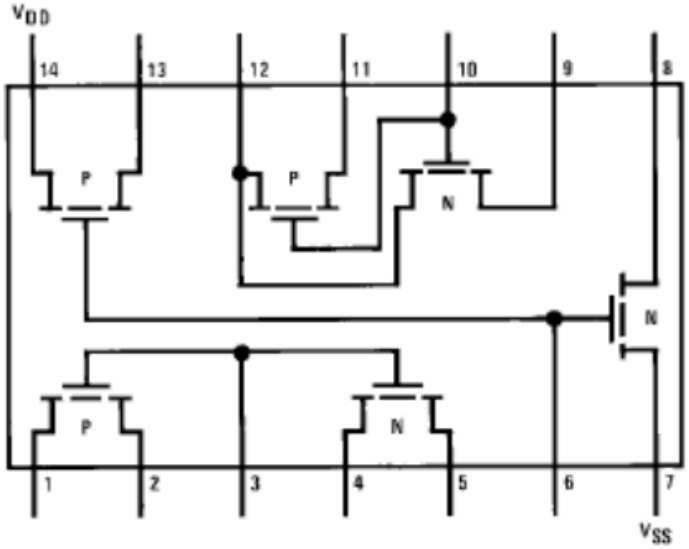

Note: All P-channel substrates are connected to V_{DD} and all N-channel substrates are connected to V_{SS}.

Top View

ACTUAL DIAGRAM:

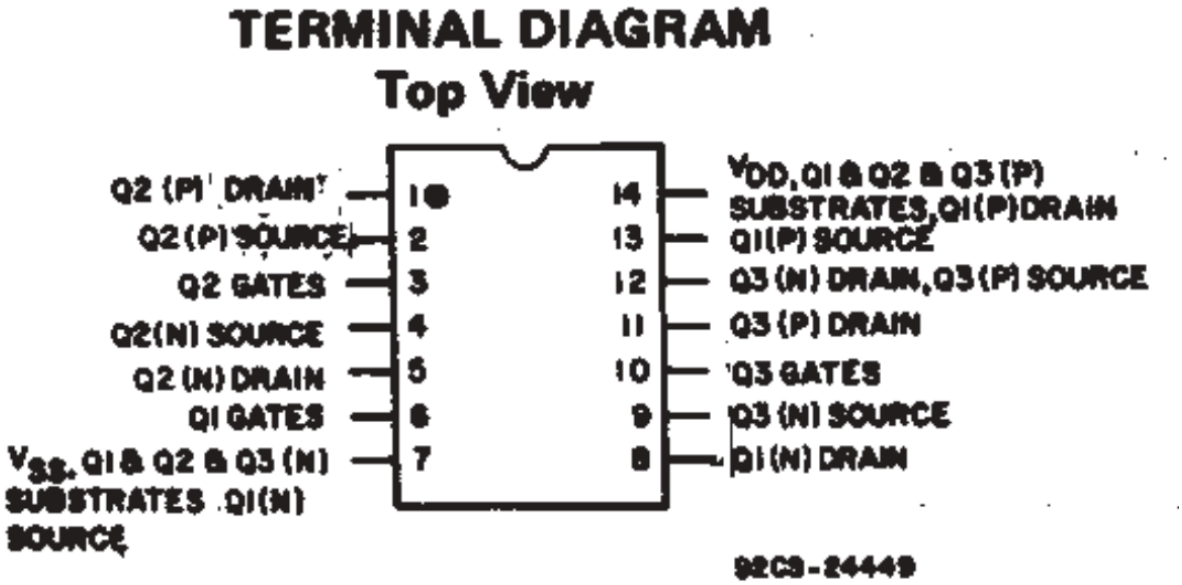

A. <u>NOT gate</u>

(a) Look at this chip pinout and draw a schematic with pin numbers for the NOT logic gate.

(b) Build a logic inverter or NOT gate using the CD4007C chip provided to you.

(c) Provide a pulse input that switches between “0” (0V) and “1” (5V).

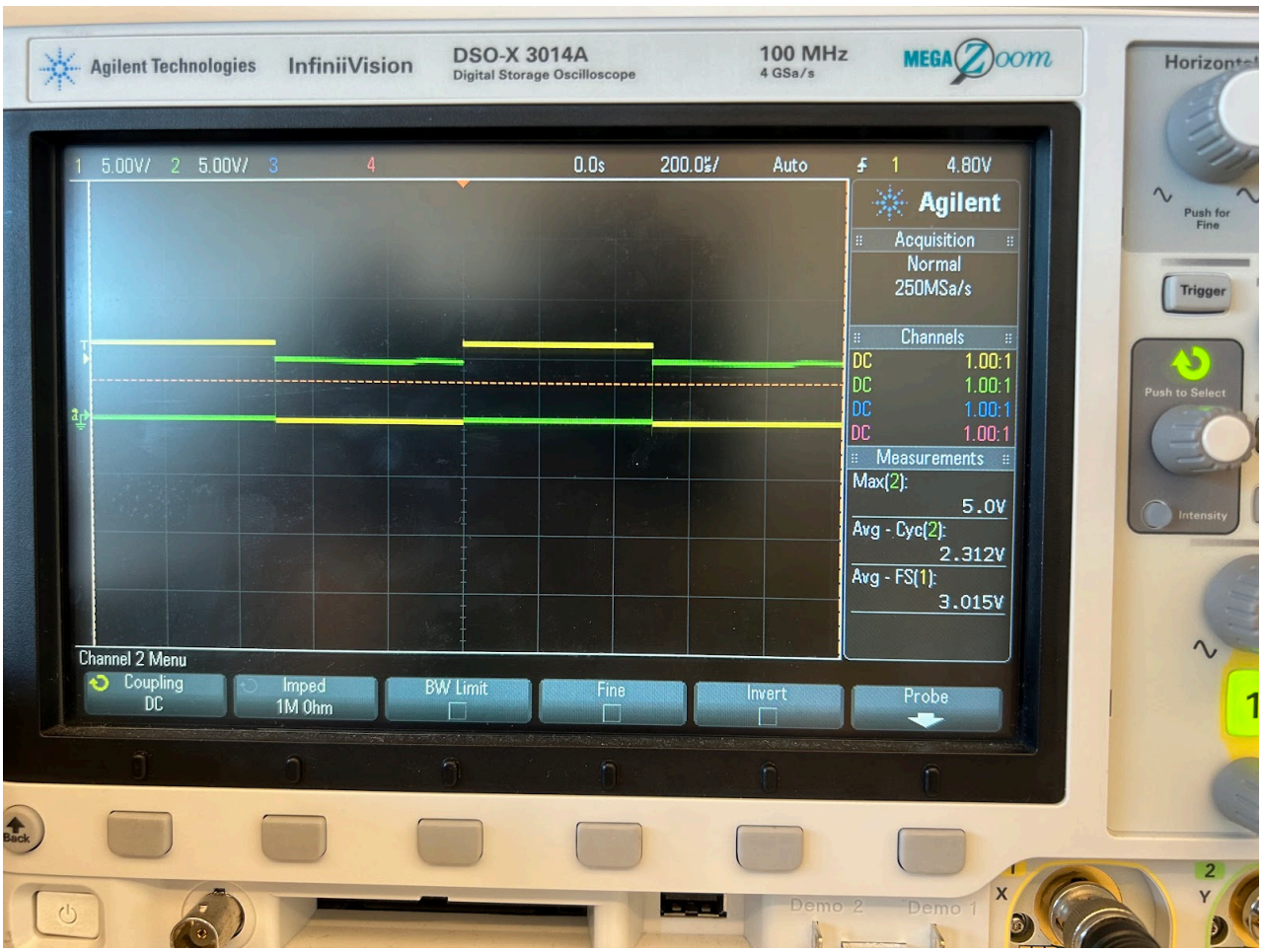
Agilent Technologies
InfiniiVision
DSO-X 3014A
Digital Storage Oscilloscope
100 MHz
4 GSa/s
MEGA Zoom
1 5.00V/ 2 5.00V/ 3 4
0.0s
200.0µs/
Auto
1 4.80V
Agilent
Acquisition
Normal
250MSa/s
Channels
DC 1.00:1
DC 1.00:1
DC 1.00:1
DC 1.00:1
Measurements
Max(2):
5.0V
Avg - Cyc(2):
2.312V
Avg - FS(1):
3.015V
Channel 2 Menu
Coupling
DC
Imped
1M Ohm
BW Limit
Fine
Invert
Probe
Back
Trigger
Push to Select
Intensity
Push for Fine
Demo 2
Demo 1
X
Y

Lab 7 drawings

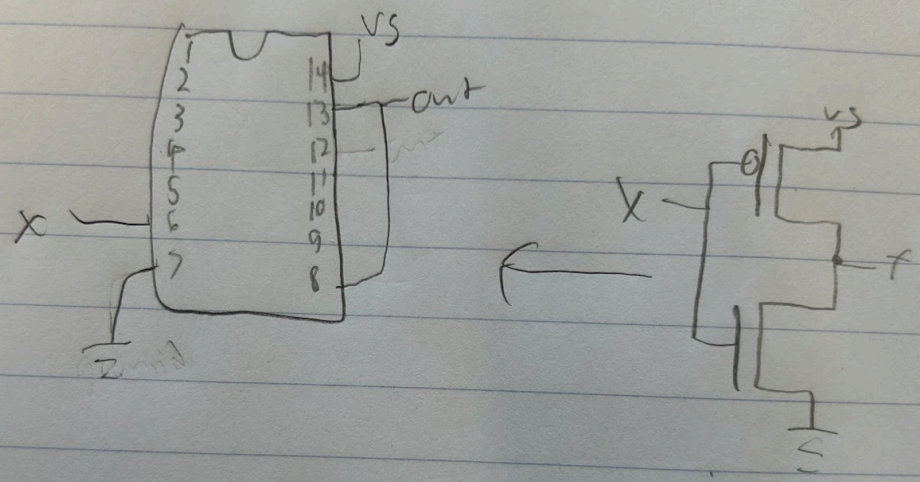

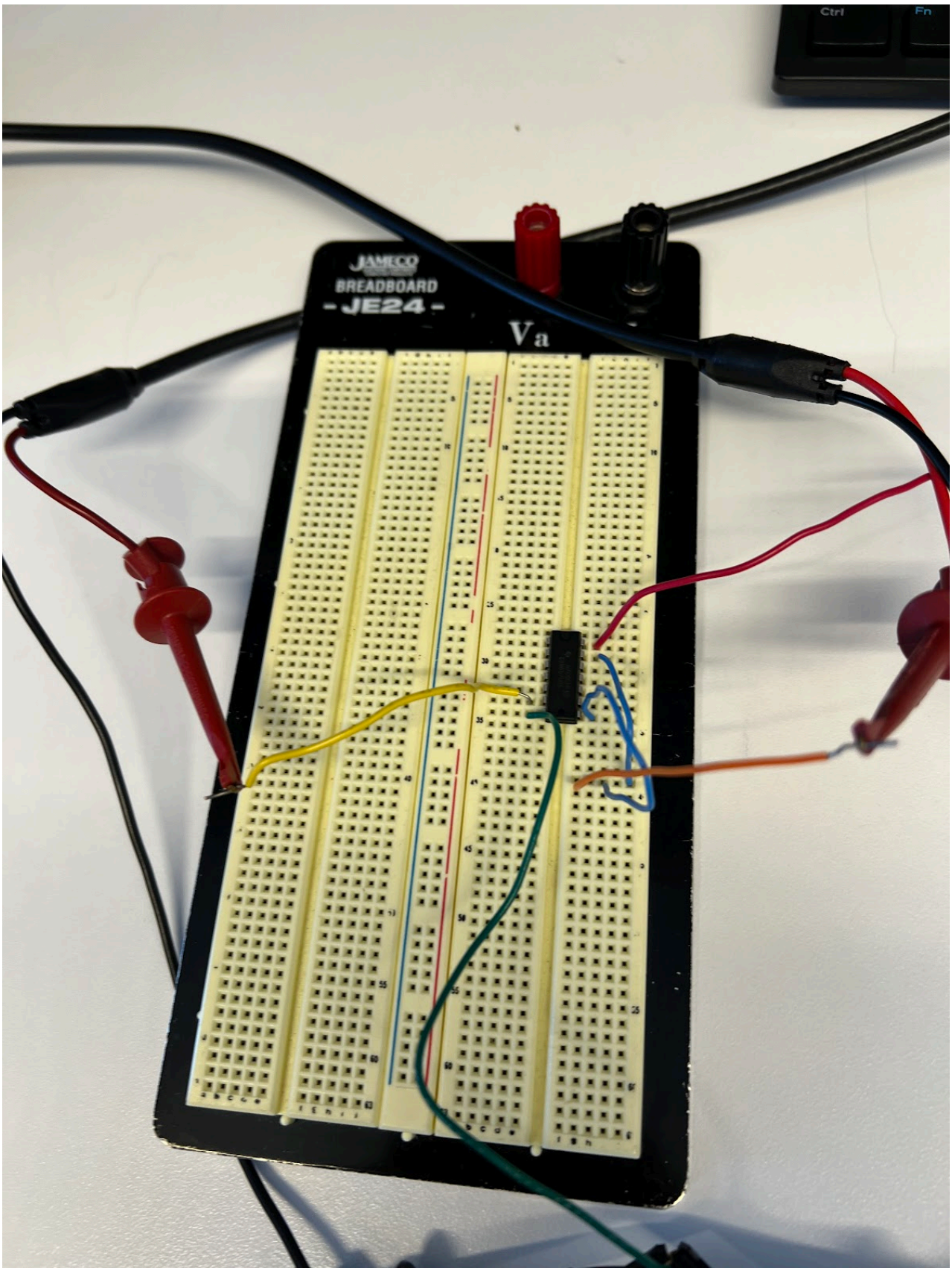

(d) Observe the output to obtain the truth table for the gate.

X	F
0	1
1	0

(e) Explain the operation of this gate and what each MOSFET is doing.
This is a not gate. When the input is 1, the nmos is on and connects f to ground (0). When input is 0, the pmos is on and connects f to vdd (5).

B. <u>NAND gate (2 input)</u>

(a) Look at this chip pinout and draw a schematic with pin numbers for the NAND logic gate.
(f) Build a two-input NAND gate using the CD4007C chip provided to you.
(b) Provide pulse inputs for inputs A and B that switch between "0" (0V) and "1" (5V).
(c) Observe the output to obtain the truth table for the gate.
This works as intended. When B is 0, the output is always 1. When B is 1, We get not gate behavior for A.

B=0

B=1

a	b	out
0	0	1
0	1	1
1	0	1
1	1	0

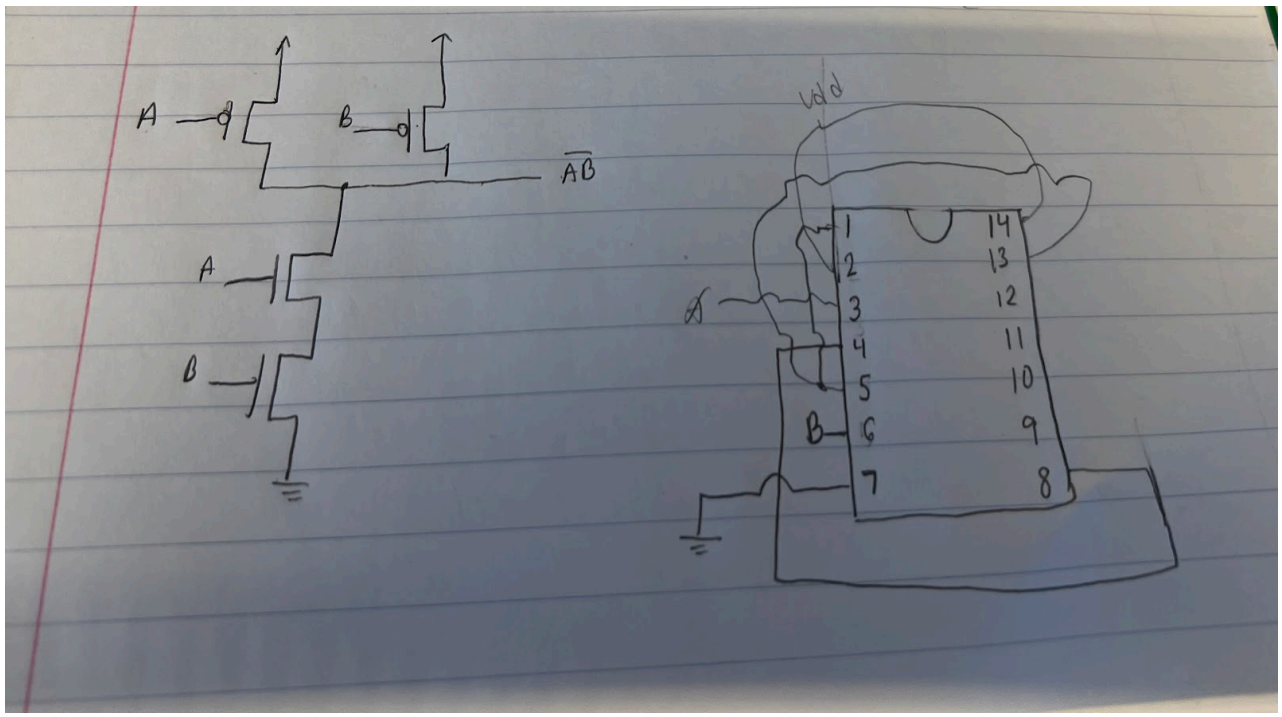
A
B
$\overline{AB}$
A
B
Vdd
1
2
3
4
5
6
7
14
13
12
11
10
9
8
A
B

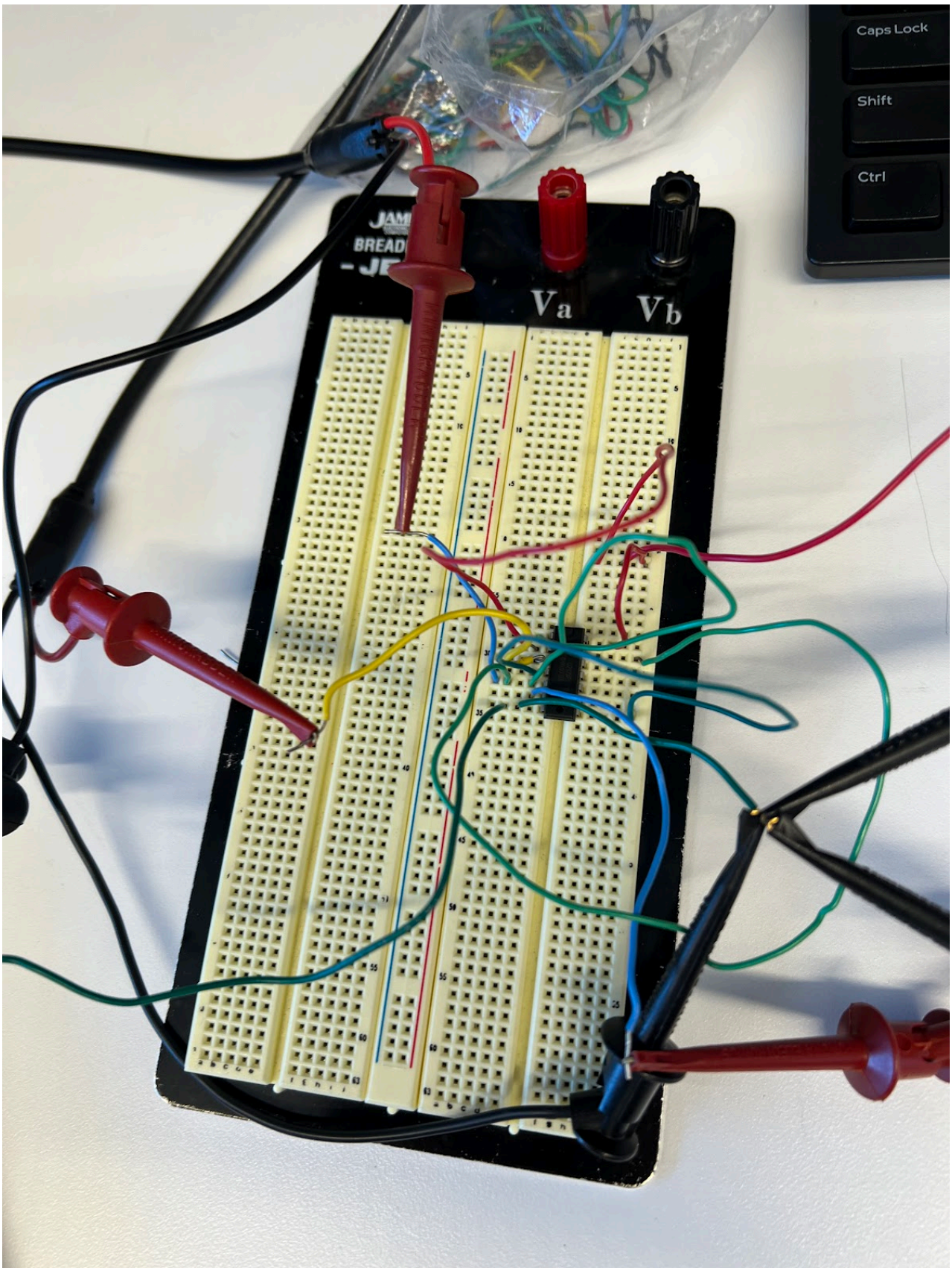

(d) Explain the operation of this gate and what each MOSFET is doing.

The nand gate acts as an inverse and gate where the output is always one unless both

inputs are 1. When A or B is zero, output will be wired to Vdd. Both A and B have to be one for output to be tied to ground (0V).

C. <u>**OR gate (2 input)**</u>

(a) Look at this chip pinout and draw a schematic with pin numbers for the OR logic gate.
(b) Build a two-input OR gate using the CD4007C chip provided to you.
(c) Provide pulse inputs for input A and B that switch between “0” (0V) and “1” (5V).
OR when B=1

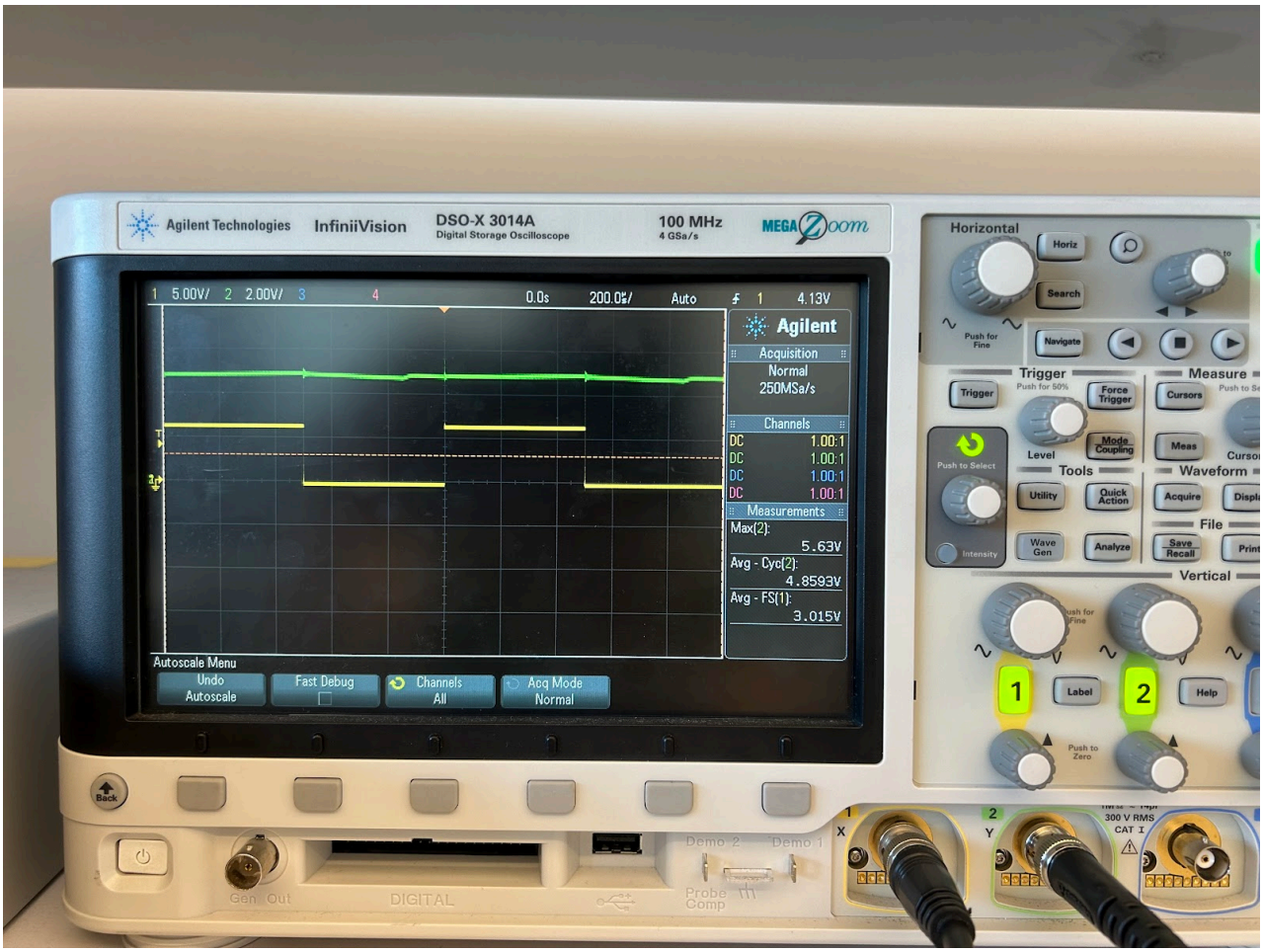

OR When B=0

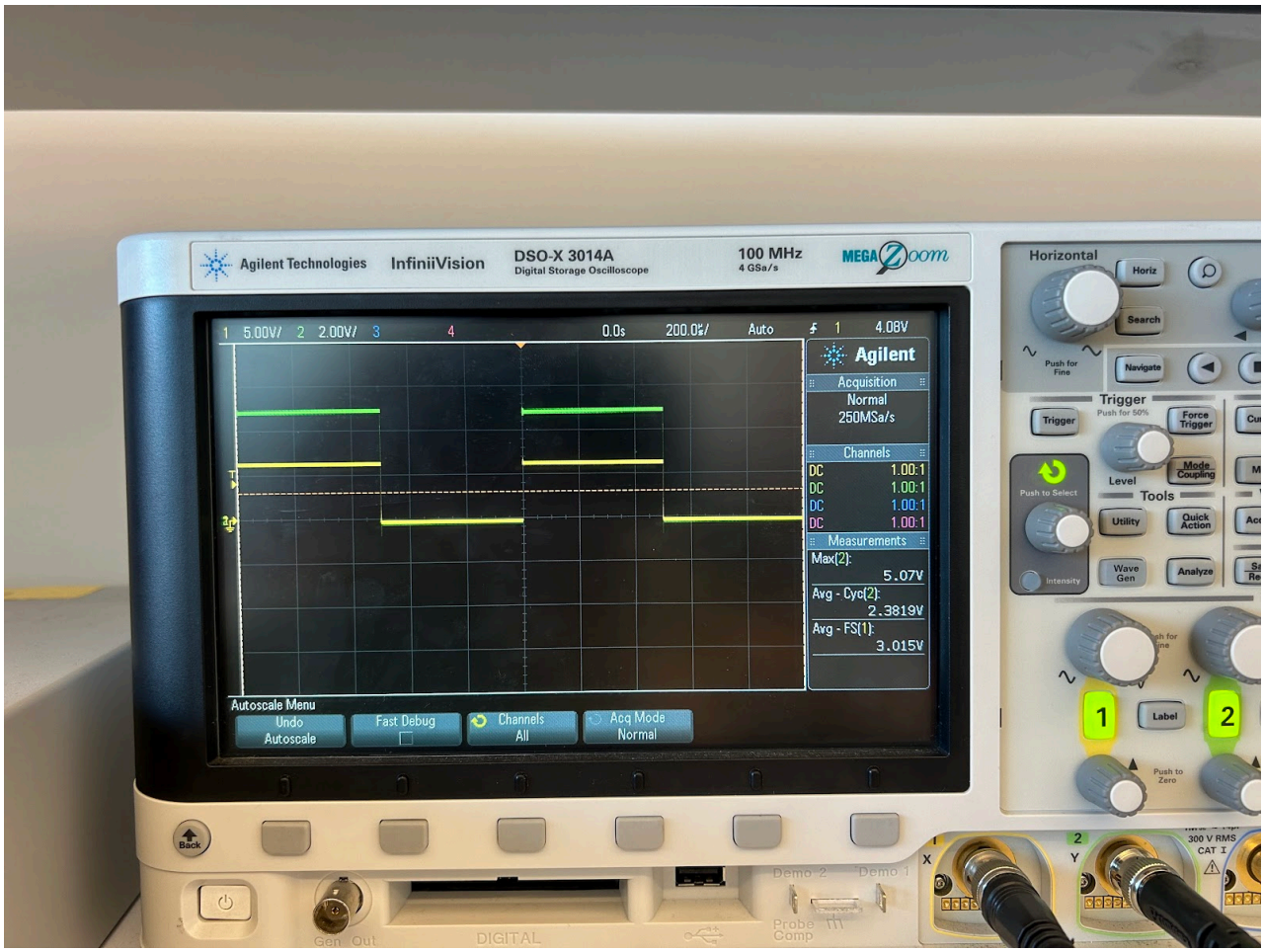
Agilent Technologies
InfiniiVision
DSO-X 3014A
Digital Storage Oscilloscope
100 MHz
4 GSa/s
MEGA Zoom
1 5.00V/ 2 2.00V/ 3 4
0.0s 200.0µs/ Auto 1 4.08V
Agilent
Acquisition
Normal
250MSa/s
Channels
DC 1.00:1
DC 1.00:1
DC 1.00:1
DC 1.00:1
Measurements
Max(2):
5.07V
Avg - Cyc(2):
2.3819V
Avg - FS(1):
3.015V
Autoscale Menu
Undo Autoscale
Fast Debug
Channels All
Acq Mode Normal
Horizontal
Horiz
Search
Navigate
Trigger
Force Trigger
Mode Coupling
Level
Tools
Utility
Quick Action
Wave Gen
Analyze
Label
Back
Gen Out
DIGITAL
Probe Comp
300 V RMS
CAT I

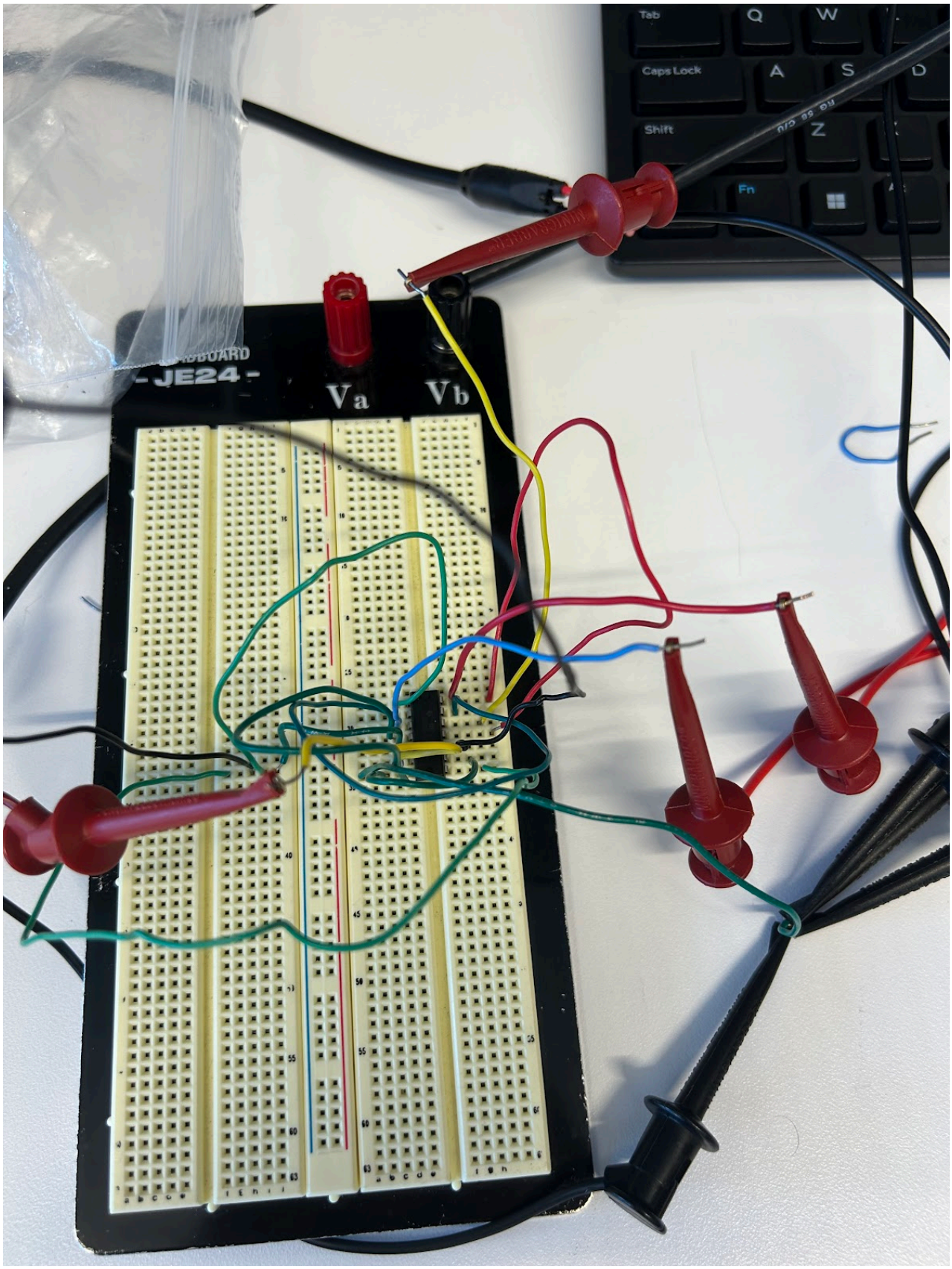
Tab
Q
W
Caps Lock
A
S
D
Shift
Z
Fn
JE24
Va
Vb

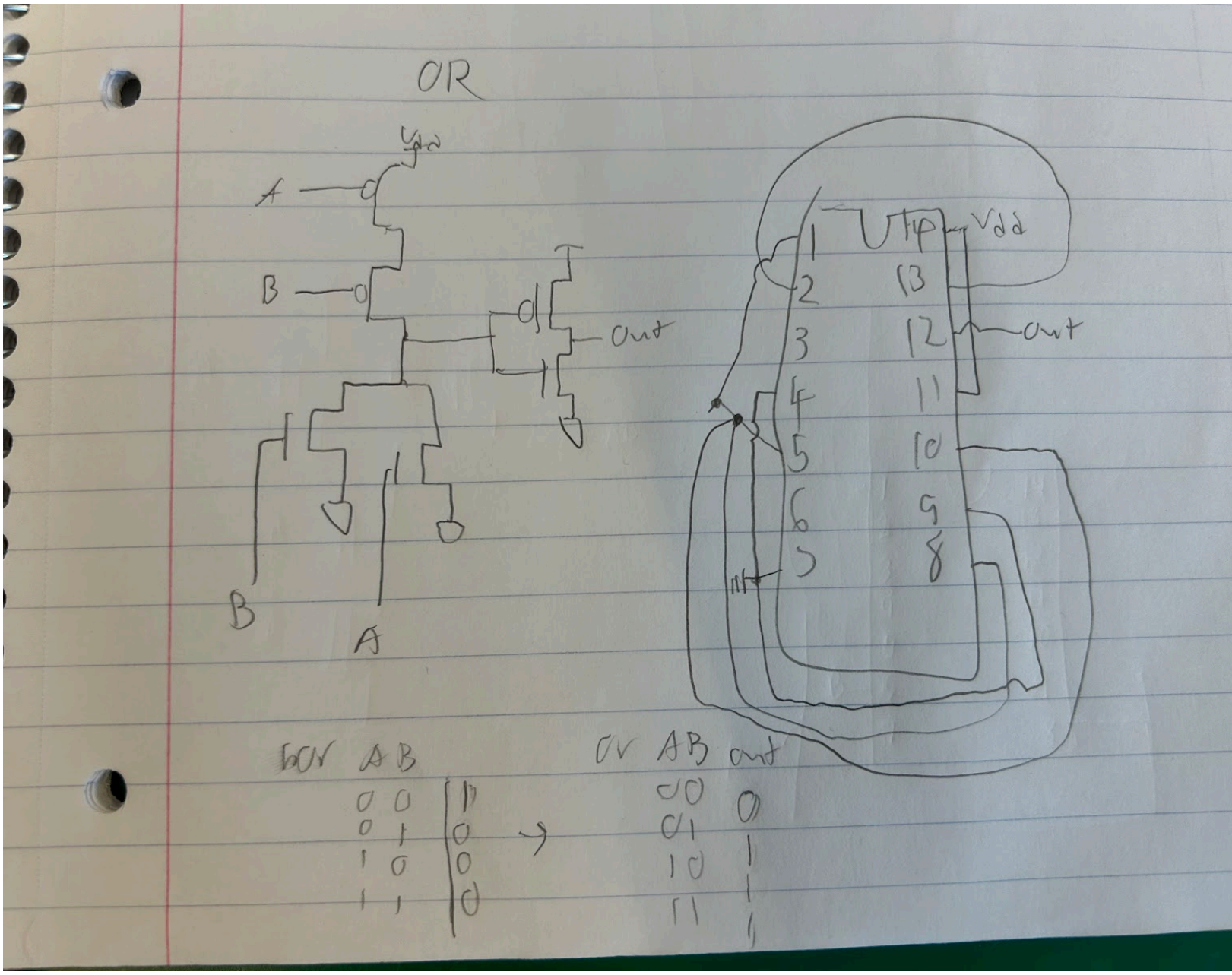

(d) Observe the output to obtain the truth table for the gate.

A	B	Out
0	0	0
0	1	1
1	0	1
1	1	1

(e) Explain the operation of this gate and what each MOSFET is doing.

The nor gate on the left only ties the output to Vdd (1) when both A and B are 0. For

every other combo it gets tied to ground so the output of the nor gate is 1. The inverter then inverts the output using the same justification as before. This results in an or gate where every output is 1 except for when both inputs are 0 (then the output is 0).